Scatter Probe

INDEPENDENT X-RAY
QUALITY ASSURANCE

40 years of X-ray safety & quality

Let’s work together to ensure X-ray safety and quality

A world-leading manufacturer of QA solutions.

In 1981, we invented the first X-ray QA system for diagnostic radiology. Since then, innovation has been at the heart of our corporate philosophy and we have pioneered many QA procedures.
We continue to invest heavily in R&D to push forward the very edge of X-ray QA, across all modalities.

Longer and more active lives, combined with a string of new examination techniques, have made diagnostic radiology the most widely used medical imaging technology.

Diagnostic imaging growth can be seen throughout the healthcare sector, including orthopaedic and vascular imaging, plus full body scanning. This will be a continuing trend, thanks to a shift in focus to more advanced healthcare globally.

As X-ray examinations increase, there is a higher risk of patient and staff exposure to levels of X-ray radiation that could result in negative health implications. As a long- standing member of, among others, IEC, AAPM, and MITA, we participate in work to research, develop, and evolve diagnostic radiology standards.

A key company-wide goal is also to educate customers and partners, sharing our deep knowledge of X-ray QA best-practice to protect patients and staff in an ever more complex operational environment.

Today, we are represented globally by subsiduaries in Europe, the USA, and Asia, as well as 100 distributors worldwide.

A scatter and leakage detector in one!

The revolution within scatter & leakage detection is here. RTI Scatter Probe – a rugged, flat, solid-state detector for scatter and leakage detection in X-ray environments.

Its unique design – two detector areas of 10 cm² and 100 cm² – fulfills current regulations and standards for X-ray leakage and scatter measurements.

Dual detection areas

For barrier, scatter, and leakage measurements various industry standards apply.

21 CFR 1020.30 to 21 CFR 1020.39
IEC 60601-2-3
IEC 60601-2-54
IEC 60601-1-3

Common for all these standards is that the measurement must be made covering an area of 10 cm² or 100 cm² at a certain distance. The detector areas of the RTI Scatter Probe ensure full compliance with these standards.

It does not matter if your scatter and leakage application require measurements at a short distance, long distance, in a fixed position, or sweep, with a click you can select the 10 cm² or 100 cm² area for your measurement.

Easy positioning

Stand on a table, use by hand, or mount on the included tripod, the Scatter Probe is quick and easy to position.

The anti-slip surface also allows safe positioning facing upwards without sliding.

With the standard camera tripod thread, the probe can be mounted to any tripod or jig!

Software connection

The Scatter Probe connects to our world-leading Ocean Next™ software for measurement reading and reporting.

Art. No: 9731001-00

Information in this folder may be changed without notice.

RTI Scatter Probe

General specifications

Connector Type	USB Type C
Cable	5 m USB A to C Extendable with optional USB Active extension cable
Power	5 V via USB
Active Area	10 cm² and 100 cm²
Dimensions	139 x 139 x 17 mm
Weight	370 g (430 g incl. handle)
Rated Range of Use	10 - 150 keV 80 - 110 kPa +10 - +40 °C 10 - 80% rel. humidity

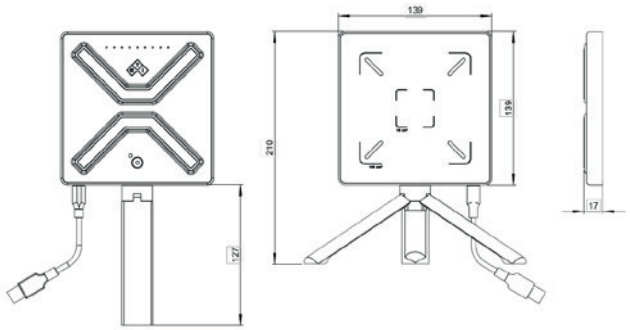

Measurements

Trig Mode	Auto or Manual
Trig Level (auto)	5 µGy/h (0.6 mR/h) or 10 µSv/h
Air Kerma Rate	0 - 100 mGy/h (0 - 10 R/h) ±10% or ±0.3 µGy/h 0.03 mR/h (ISO N20-N150)
H*(10) Rate	0 - 200 mSv/h ±10% or ±0.6 µSv/h (ISO N20-N150)
Mean Energy	10 - 150 keV ±10% or 5 keV (min rate: 25 µGy/h)
Half Value Layer (HVL)	0.1 - 17 mm Al ±10% or 0.05 mm Al (min rate: 25 µGy/h)
Time	0 - 9999 s
Sampling Rate	1 - 300 Hz
Bandwidth	0.5 to 50 Hz

Specifications above valid for the 100 cm² detector area.

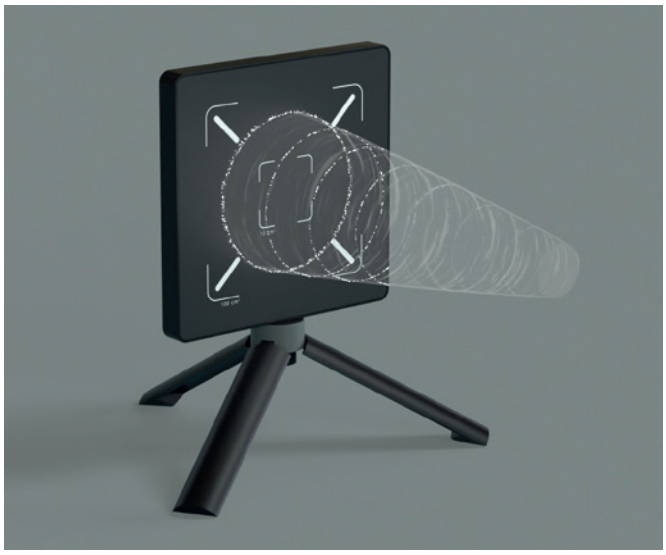

2026-10

RTI Group Headquarters
Flöjelbergsgatan 8C
SE-431 37 Mölndal, SWEDEN

Phone: +46 (0) 31 746 36 00
sales@rtigroup.com
www.rtigroup.com

RTI Group North America
33 Jacksonville Road, Bldg. 1
Towaco, NJ 07082, USA

Phone: +1 800-222-7537
sales.us@rtigroup.com
www.rtigroup.com