Scatter Probe

INDEPENDENT X-RAY
QUALITY ASSURANCE



Let’s work together to ensure X-ray safety and quality



A world-leading manufacturer of QA solutions.

In 1981, we invented the first X-ray QA system for diagnostic radiology. Since then, innovation has been at the heart of our corporate philosophy and we have pioneered many QA procedures.

We continue to invest heavily in R&D to push forward the very edge of X-ray QA, across all modalities.

Longer and more active lives, combined with a string of new examination techniques, have made diagnostic radiology the most widely used medical imaging technology.

Diagnostic imaging growth can be seen throughout the healthcare sector, including orthopaedic and vascular imaging, plus full body scanning. This will be a continuing trend, thanks to a shift in focus to more advanced healthcare globally.

As X-ray examinations increase, there is a higher risk of patient and staff exposure to levels of X-ray radiation that could result in negative health implications. As a long- standing member of, among others, IEC and AAPM, we participate in work to research, develop, and evolve diagnostic radiology standards.

RTI is dedicated to educating customers and partners, sharing our deep knowledge of X-ray QA best-practice to protect patients and staff in an ever more complex operational environment.

Today, we are represented globally through subsidiaries in Europe, the USA, and Asia, and a network of approximately 100 distributors worldwide.

A scatter and leakage detector in one!

The revolution within scatter & leakage detection is here. RTI Scatter Probe – a rugged, flat, solid-state detector for scatter and leakage detection in X-ray environments. Its unique design – two detector areas of 10 cm^2 and 100 cm^2 – fulfills current regulations and standards for X-ray leakage and scatter measurements.

Dual detection areas

For barrier, leakage and scatter measurements various industry standards apply. Examples of such standards are

21 CFR 1020.30 to 21 CFR 1020.39
IEC 60601-2-3
IEC 60601-2-54
IEC 60601-1-3

Common for all these standards is that the measurement must be made covering an area of 10 cm^2 or 100 cm^2 at a certain distance. The detector areas of the RTI Scatter Probe ensure full compliance with these standards.

It does not matter if your scatter and leakage application require measurements at a short distance, long distance, in a fixed position, or sweep, with a click you can select the 10 cm^2 or 100 cm^2 area for your measurement.

Easy positioning

Stand on a table, use by hand, or mount on the included tripod, the Scatter Probe is quick and easy to position.

The anti-slip surface also allows safe positioning facing upwards without sliding.



With the standard camera tripod thread, the probe can be mounted to any tripod or jig!

Now part of the Mako ecosystem

Already have a Mako? Simply connect the RTI Scatter Probe to your Mako Base Unit via Bluetooth or USB cable and choose your preferred workflow.



RTI Mako Display App – Wireless freedom on your smartphone

Use the free **RTI Mako Display App** on your touchscreen smartphone for intuitive scatter and leakage measurements.

Ocean Next™ – Advanced analysis, templates, and reporting

Connect to our world-leading **Ocean Next™** software for advanced measurement analysis, customizable templates, and professional reporting.

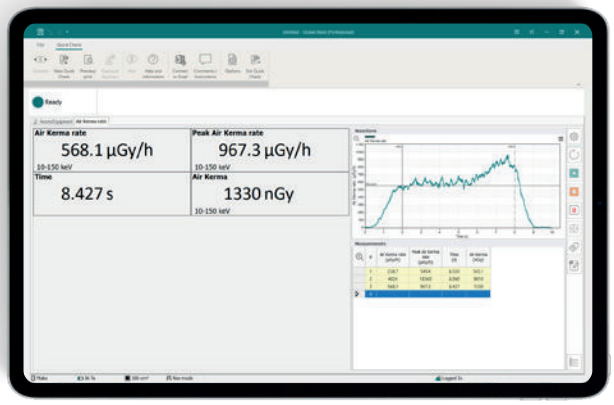

Information in this folder may be changed without notice.

RTI Scatter Probe

General specifications

Connector Type	USB Type C
Cable	5 m USB A to C Extendable with optional USB active extension cable
Power	5V, from display unit, via USB
Active Area	10 cm^2 and 100 cm^2
Dimensions	139 x 139 x 17 mm
Weight	370 g (430 g incl. handle)
Trig Modes	Auto or Manual
Rated Range of Use	10 - 150 keV 80 - 100 kPa +10 - +40 °C 10 - 80% rel. humidity

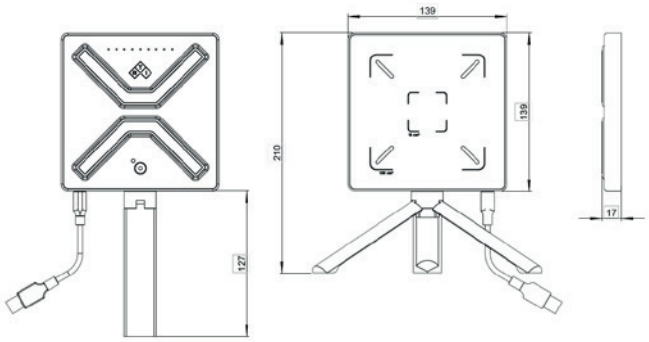

Measurements

Trig Level (auto)	5 µGy/h (0.6 mR/h) or 10 µSv/h
Air Kerma Rate	0 - 100 mGy/h (0 - 10 R/h) ±10% or ±0.3 µGy/h 0.03 mR/h (ISO N20-N150)
Air Kerma	0.001 µGy – 999 Gy, ±10%
H*(10) (integrated):	0.002 µSv – 999 Sv, ±10%
H*(10) Rate	0.002 µSv – 999 Sv ±10% or ±0.6 µSv/h (ISO N20-N150)
Mean Energy	10 - 150 keV ±10% or 5 keV (min rate: 25 µGy/h)
Half Value Layer (HVL)	0.1 - 17 mm Al ±10% or 0.05 mm Al (min rate: 25 µGy/h)
Time	0 - 9999 s
Sampling Rate	1 - 300 Hz
Bandwidth	0.5 to 50 Hz

Specifications above valid for the 100 cm^2 detector area.

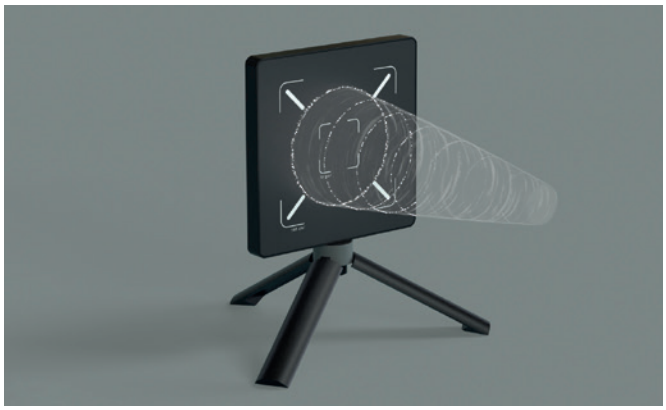

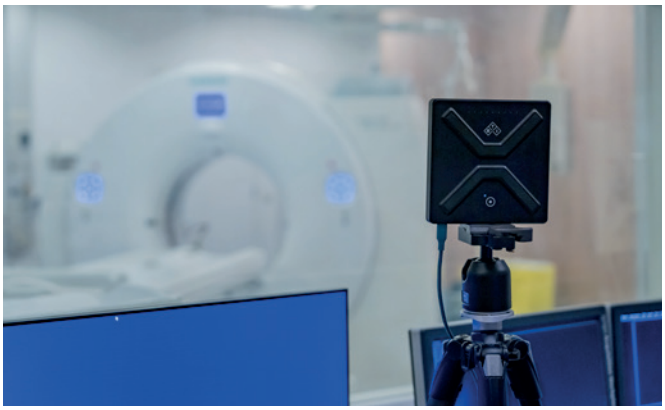

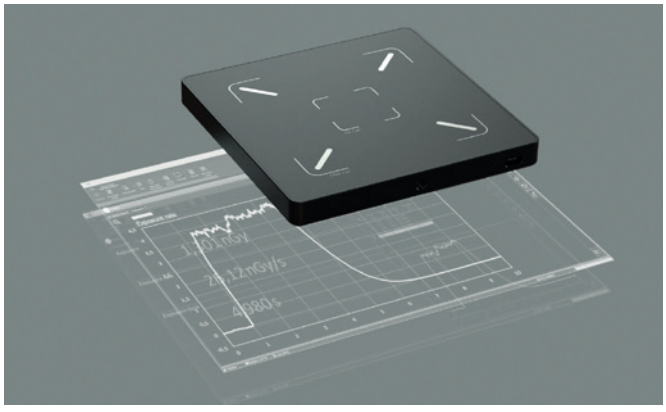



2026-11